DocuSign Envelope ID: 9821F039-6548-4DA9-92AC-5F7BEA4F2B89

5/14/99

Kimley»Horn ©2017
421 FAYETTEVILLE ST, SUITE 600
RALEIGH, N.C. 27601

| PROJECT REFERENCE NO. | SHEET NO. |
|---|---|
| 011036406 | 6 |

ROADWAY DESIGN ENGINEER
NORTH CAROLINA PROFESSIONAL SEAL 18151 ENGINEER CHARLES A. NUCKOLS, III
Charles A. Nuckols III
4/25/2018

HYDRAULICS ENGINEER
NORTH CAROLINA PROFESSIONAL SEAL 042551 ENGINEER BRYAN T. VICKERY
Bryan T. Vickery
4/25/2018

**DOCUMENT NOT CONSIDERED FINAL UNLESS ALL SIGNATURES COMPLETED**

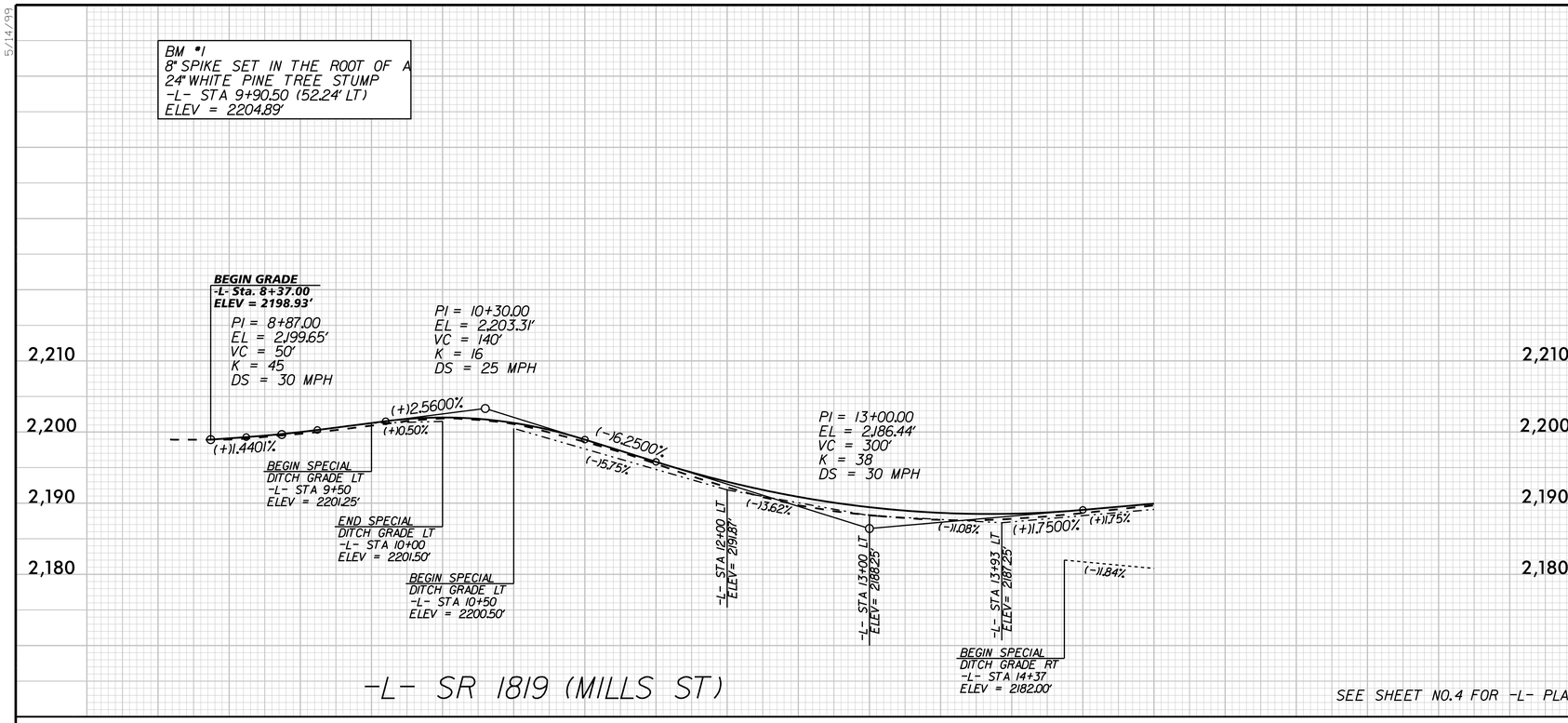


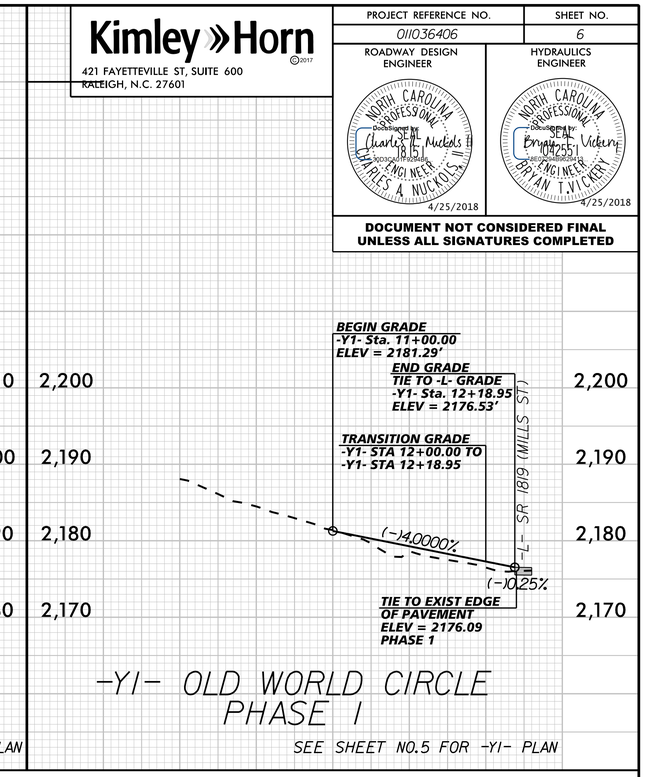


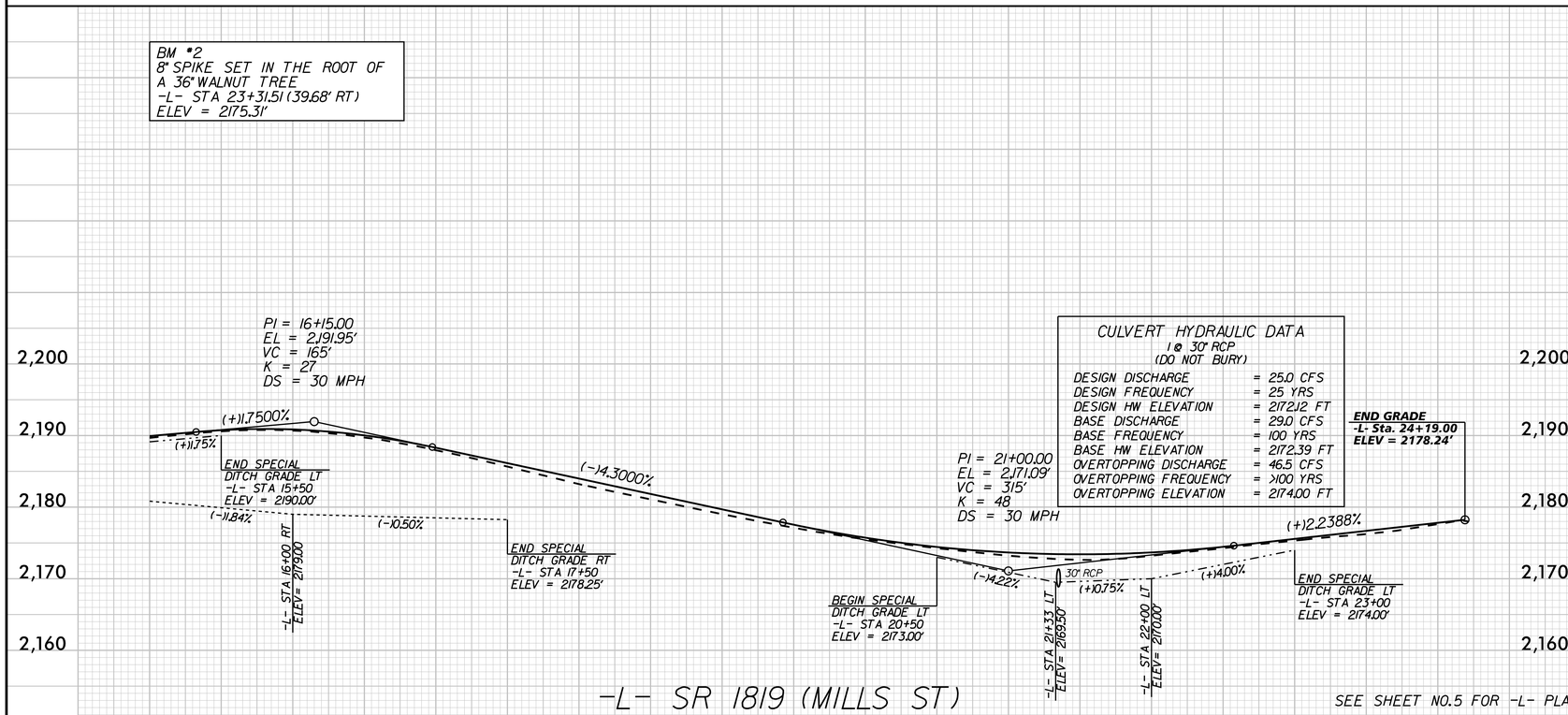


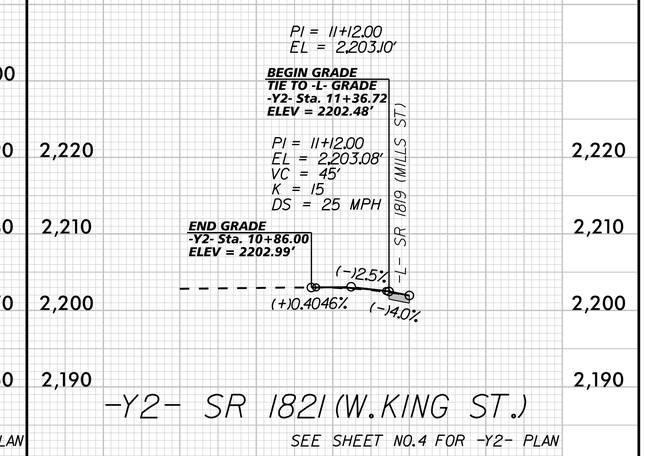


4/24/2018